ROHS

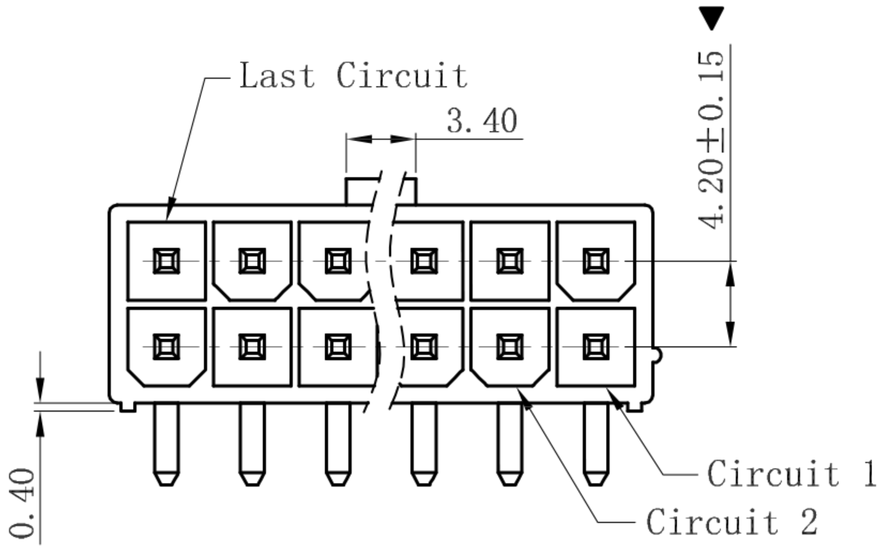

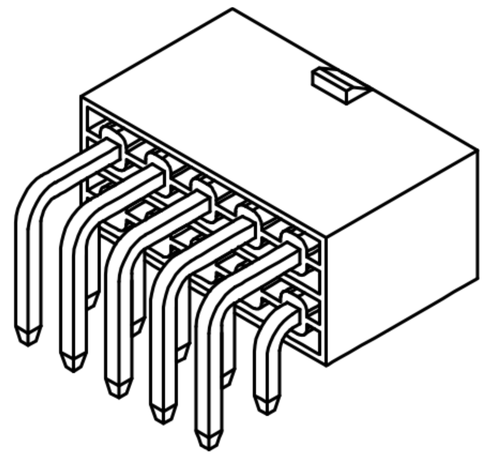

■ SPECIFICATIONS

- Voltage rating: 600V AC, DC
- Current rating: 7A, AC, DC
- Withstanding Voltage: 1500V AC/minute
- Insulation resistance:1000MΩ min
- Temperature range: -25° C~+85° C
- Contact resistance: 20mΩ max

■ WAFER

- Part No.: 4255WR-2xNP
- Poles : 02-24P
- Housing Material: PA66 UL94V-2 or UL94V-0
- Pin Material: Brass
- Contact Area Plating: Tin-Plated or Gold-Flash

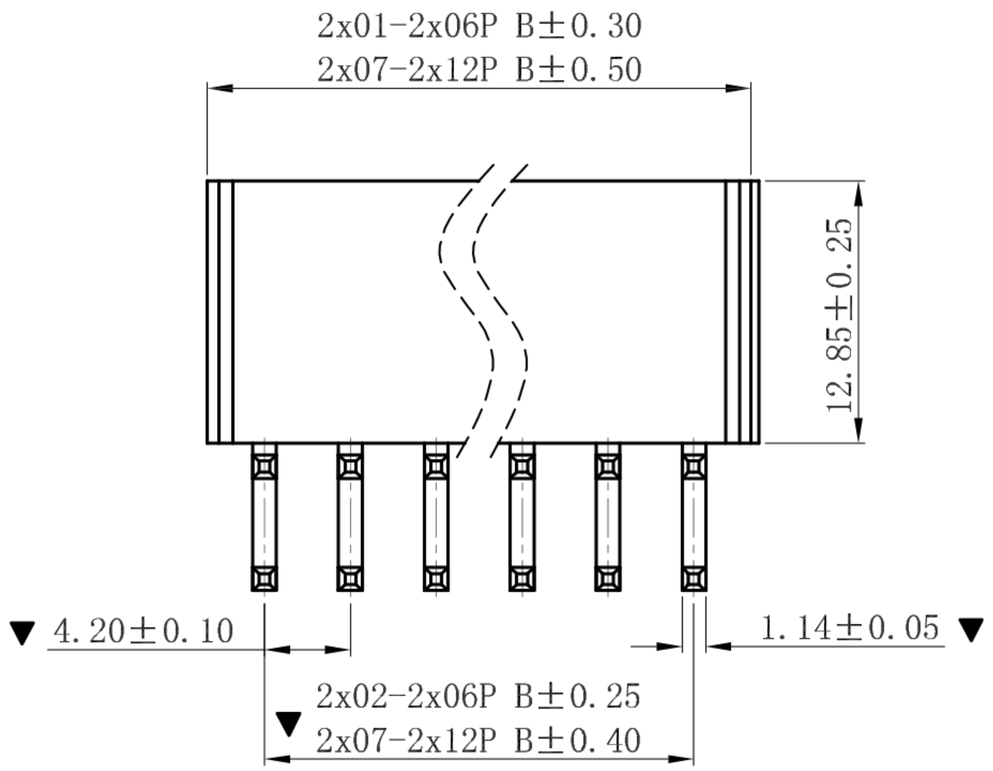

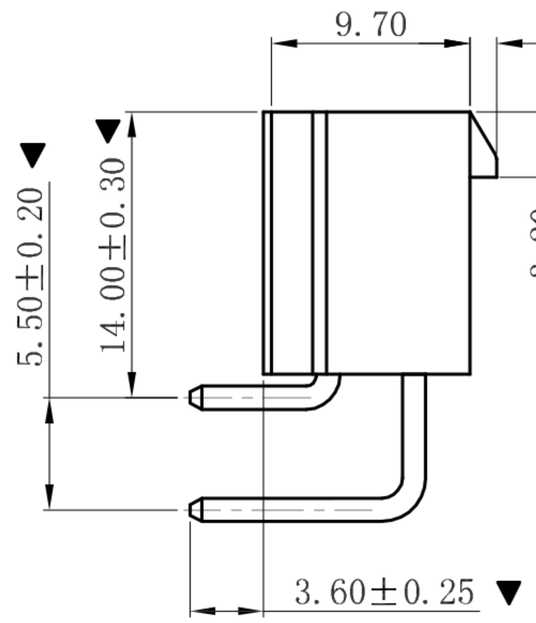

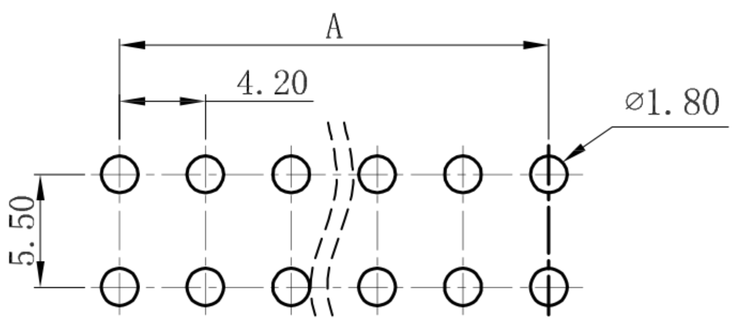

P.C.B LAYOUT

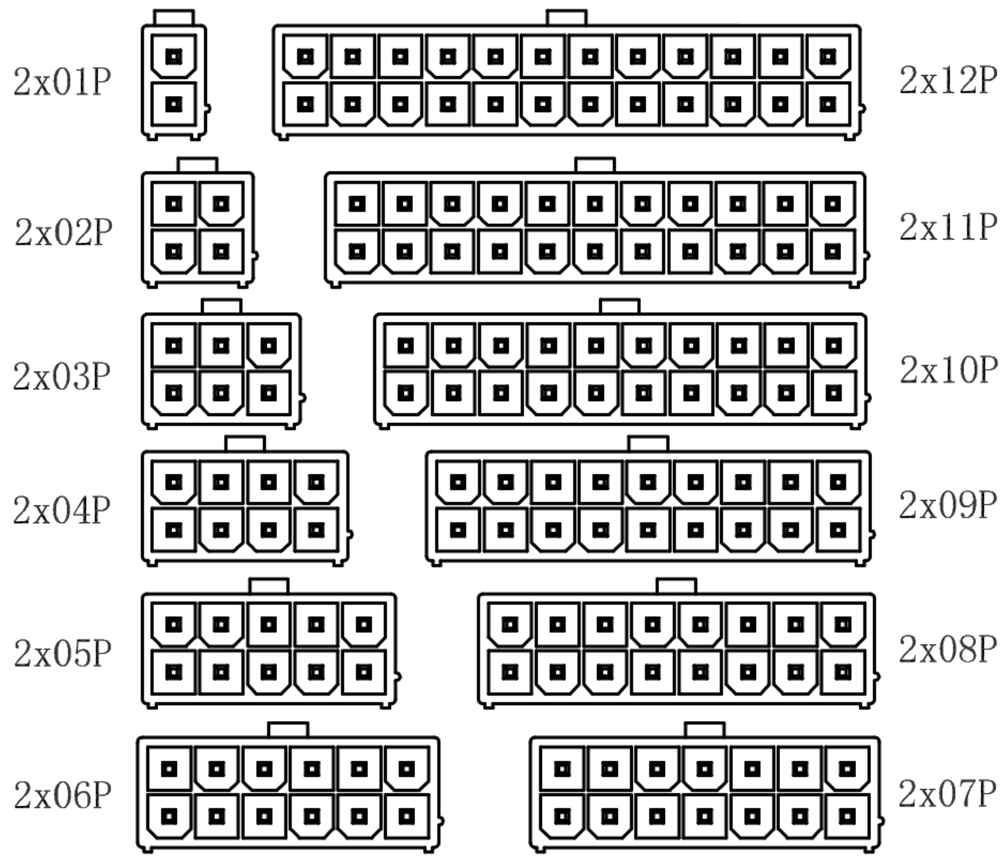

CIRCUIT SIZE LAYOUT

Poles	Dimensions(mm)	
	A	B
2x01	--	5.60
2x02	4.20	9.80
2x03	8.40	14.00
2x04	12.60	18.20
2x05	16.80	22.40
2x06	21.00	26.60
2x07	25.20	30.80
2x08	29.40	35.00
2x09	33.60	39.20
2x10	37.80	43.40
2x11	42.00	47.60
2x12	46.20	51.80

ECN NO.	REV.	DATE.	DESCRIPTION.	CHANGE.	CHECK.	APPRO.
———	A	———	NEW	———	———	———

APPROVALS		DATE
DRAWN	ZHIWEI.CHEN	2015.07.07
CHECKED		
APPROVALS		

TOLERANCES ARE: 30~以上 ±0.30; 10~30 ±0.20; 5~10 ±0.15; ~ 5 ±0.10; ANGLE ±2°

深圳市联丰盈电子有限公司
SHENZHEN LINFENYING ELECTRONIC CO.,LTD

TITLE:

PART NO. GP01-4255WR-2xNP

UNIT: mm SCALE: 1:1 PROJ:

DRAWING NO. ——— SHEET 1 OF 1